United States Patent

Ashley et al.

[15] **3,698,283**

[45] **Oct. 17, 1972**

[54] **MULTIBARREL AUTOMATIC WEAPON**

[72] Inventors: **Eugene Ashley**, Burlington; **Douglas P. Tassie**, St. George; **James M. Seemann**, South Burlington, all of Vt.

[73] Assignee: **General Electric Company**

[22] Filed: **March 10, 1970**

[21] Appl. No.: **18,031**

[52] **U.S. Cl.**.....**89/12**, 89/13 R, 89/33 MC

[51] **Int. Cl.**.....**F41d 7/02**

[58] **Field of Search**.....89/1 C, 13, 155, 33, 33 MC, 89/126; 42/39.5

[56] **References Cited**

UNITED STATES PATENTS

2,971,440	2/1961	O'Brien	89/33 MC X
2,998,758	9/1961	Quellette	89/33 R X
2,959,106	11/1960	O'Brien	89/33 MC X
2,856,819	10/1958	Meyers et al.	89/33 MC X
1,424,751	8/1922	Bangerter	89/155 X
3,041,939	7/1962	Dardick	89/155 X

Primary Examiner—Samuel W. Engle

Attorney—Bailin L. Kuch, Harry C. Burgess, Irving M. Freedman, Frank L. Neuhauser, Oscar B. Waddell and Joseph B. Forman

[57] **ABSTRACT**

A gun having at least a barrel, at least a chamber and means for moving said chamber transversely to said barrel from a noncoaxial feed station to a coaxial lock and fire station, and means including a stationary cam surface for progressively chambering a cartridge in said chamber as it moves from said feed station to said lock and fire station.

4 Claims, 12 Drawing Figures

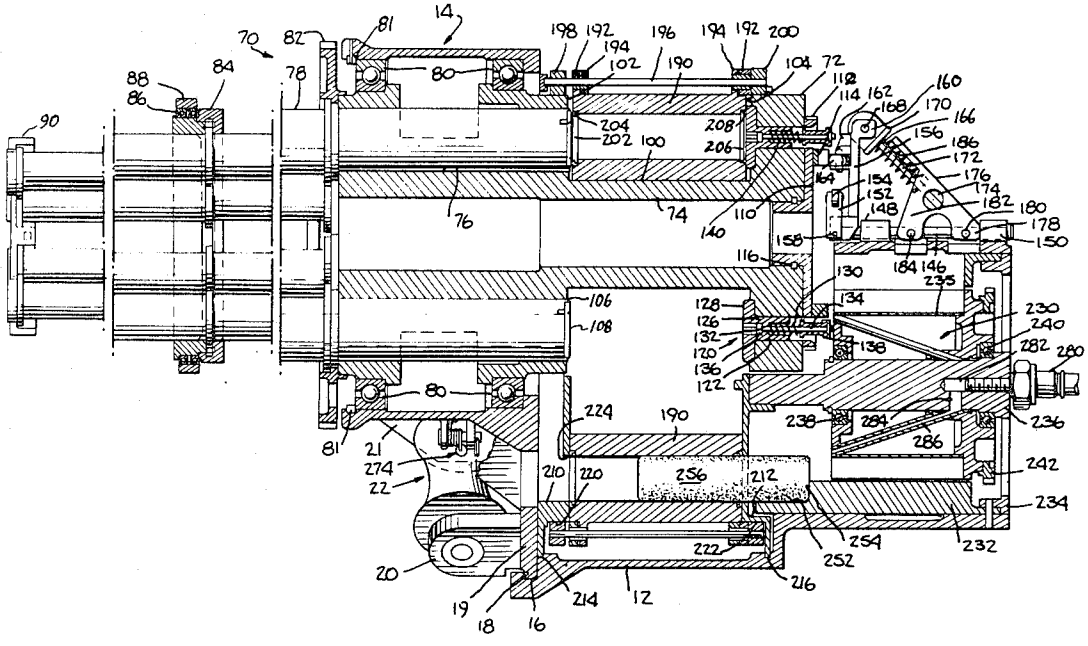

PATENTED OCT 17 1972

3,698,283

SHEET 1 OF 8

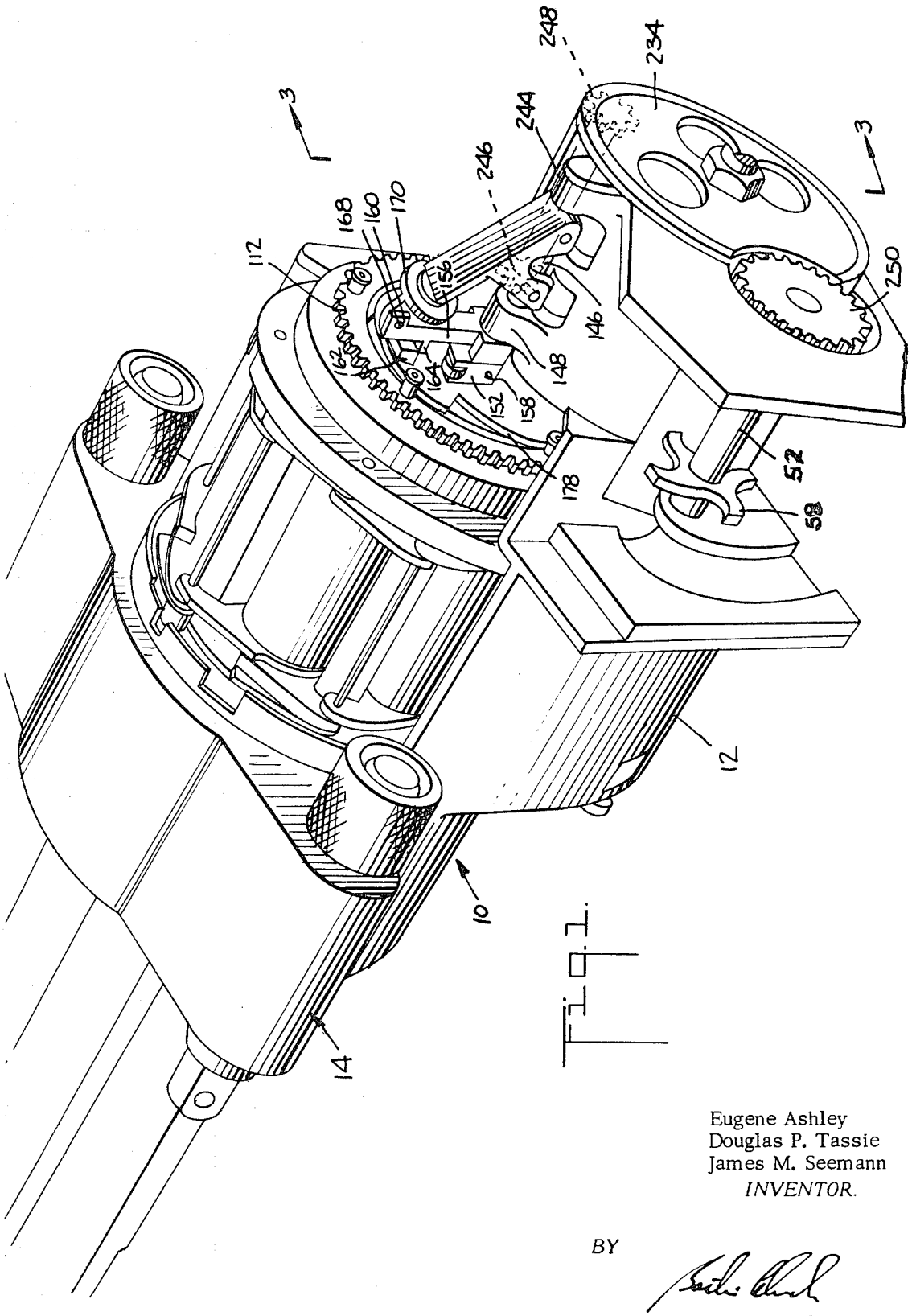

Fig. 1.

Eugene Ashley
Douglas P. Tassie
James M. Seemann
INVENTOR.

BY

ATTORNEY

Fig. 2

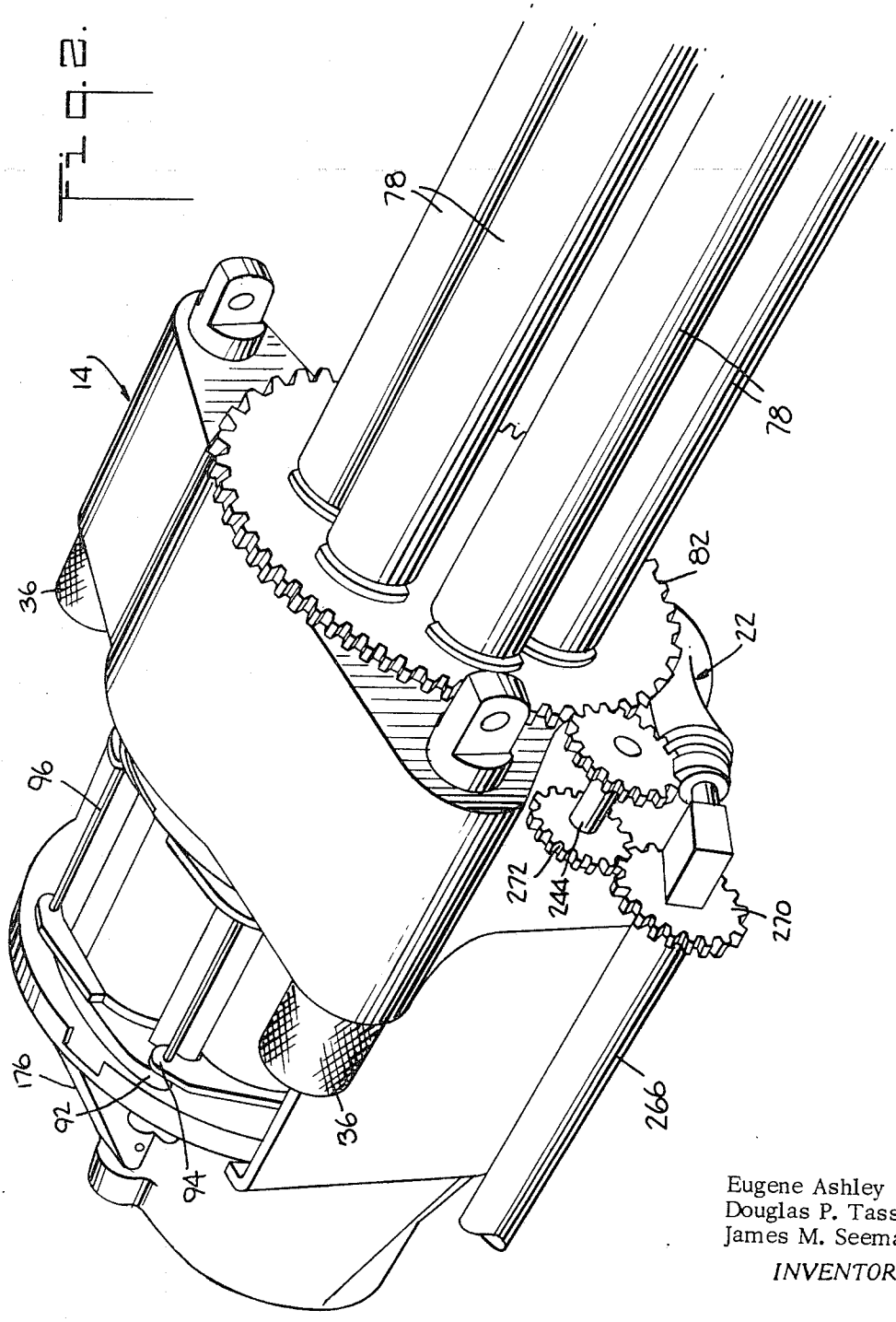

Eugene Ashley
Douglas P. Tassie
James M. Seemann
INVENTOR.

BY

ATTORNEY

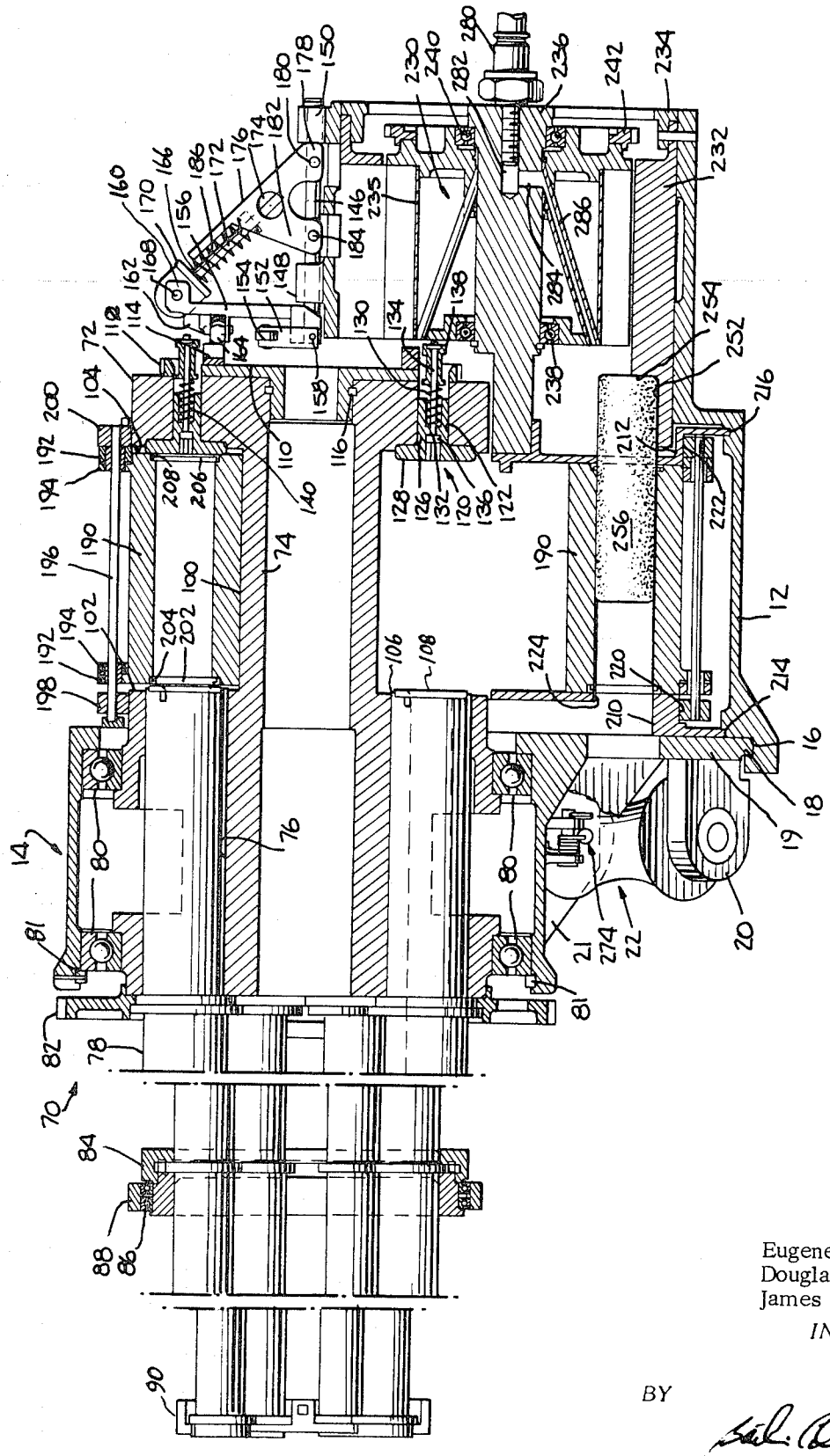

FIG. 3.

Eugene Ashley
Douglas P. Tassie
James M. Seemann
INVENTOR.

BY

ATTORNEY

FIG. 4.

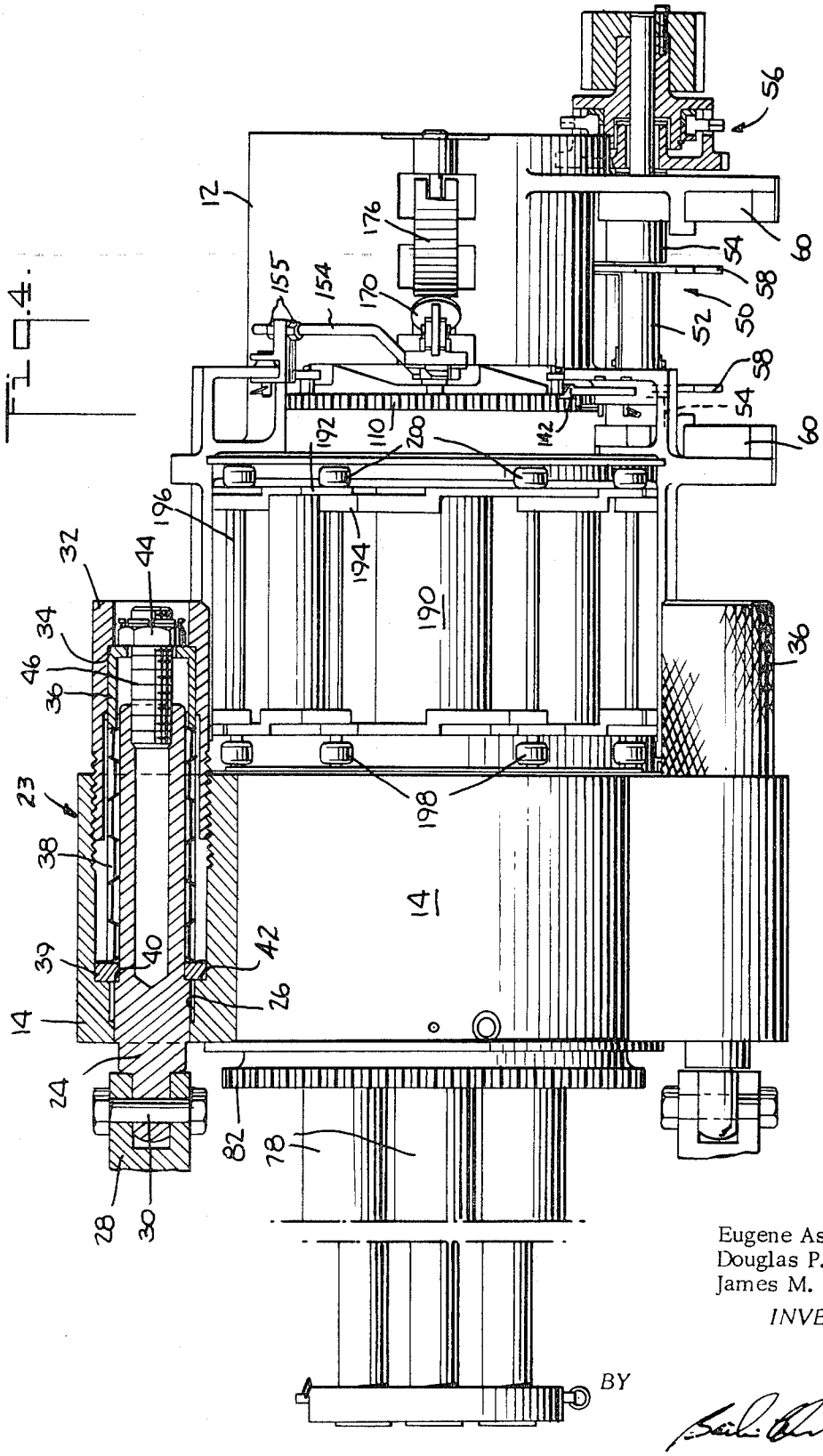

Eugene Ashley
Douglas P. Tassie
James M. Seemann
INVENTOR.

BY

ATTORNEY

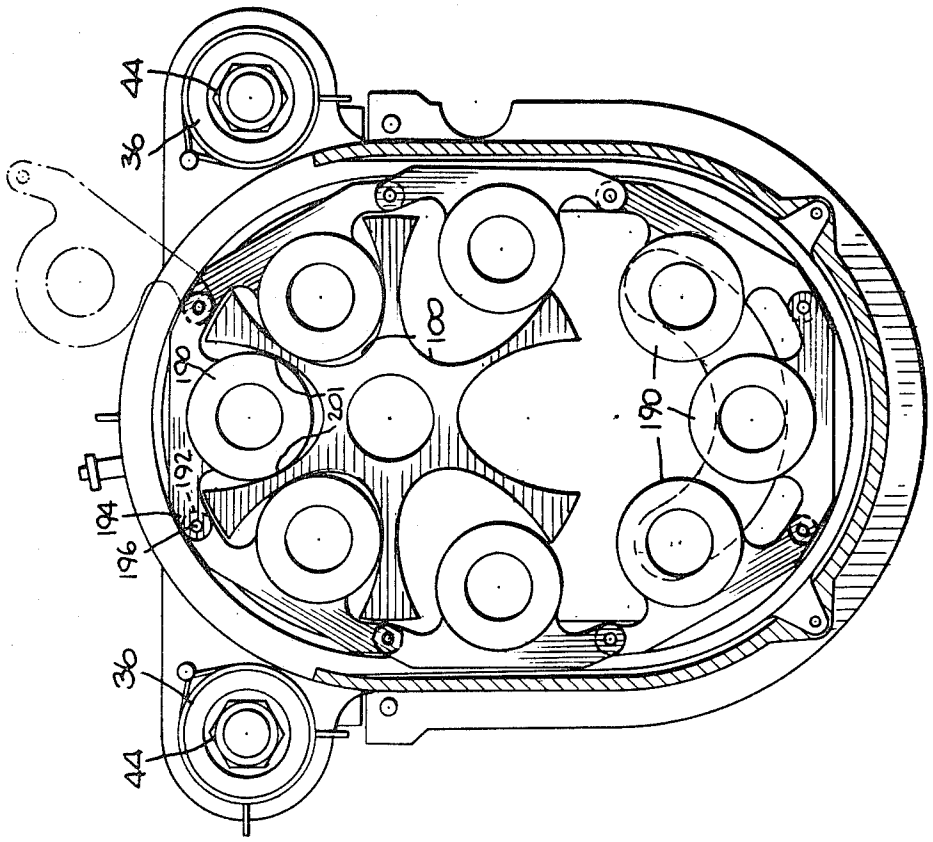

Fig. 6.

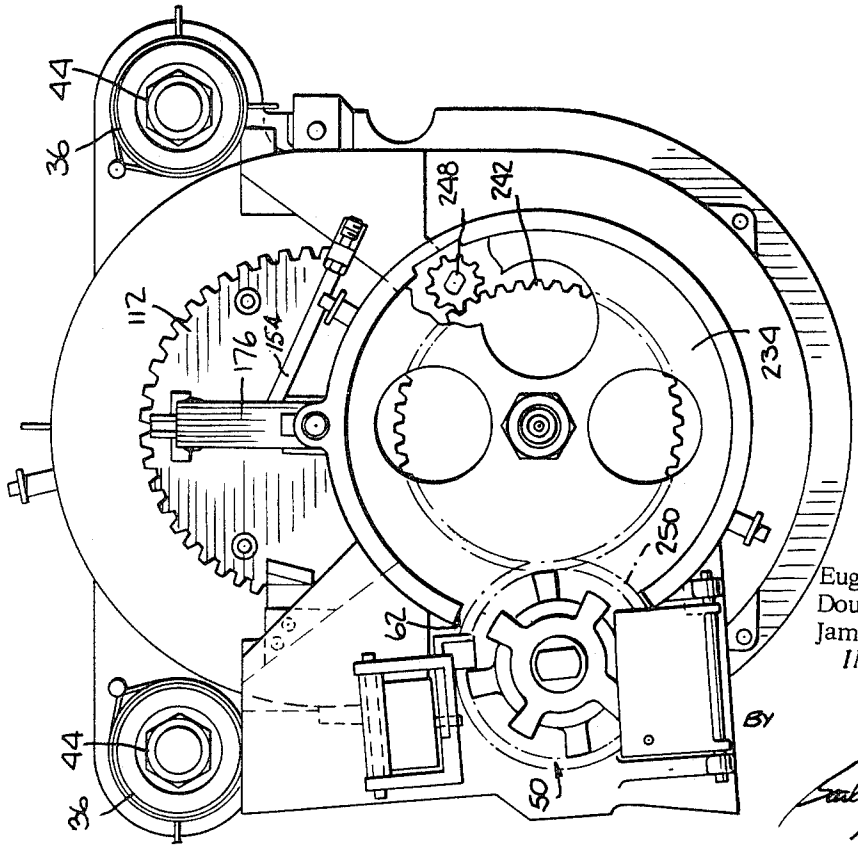

Fig. 5.

Eugene Ashley
Douglas P. Tassie
James M. Seemann
INVENTOR.

BY

ATTORNEY

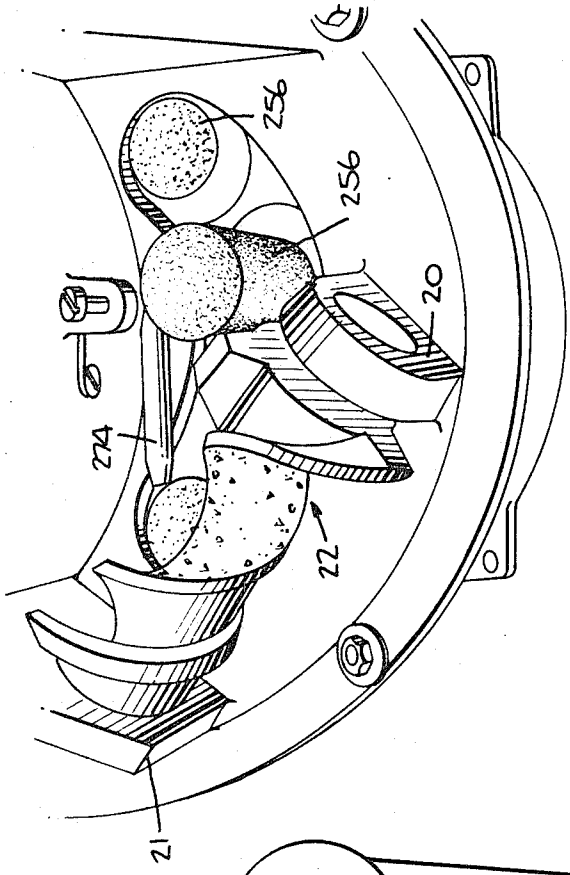

Fig. 8.

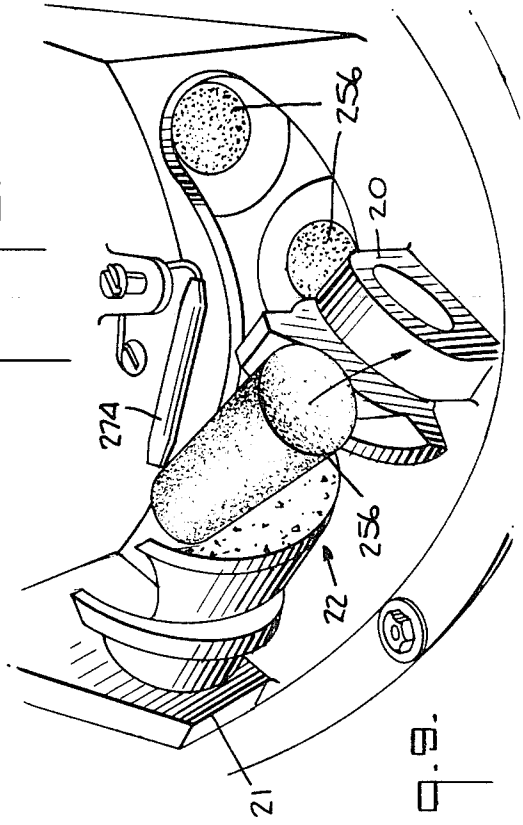

Fig. 9.

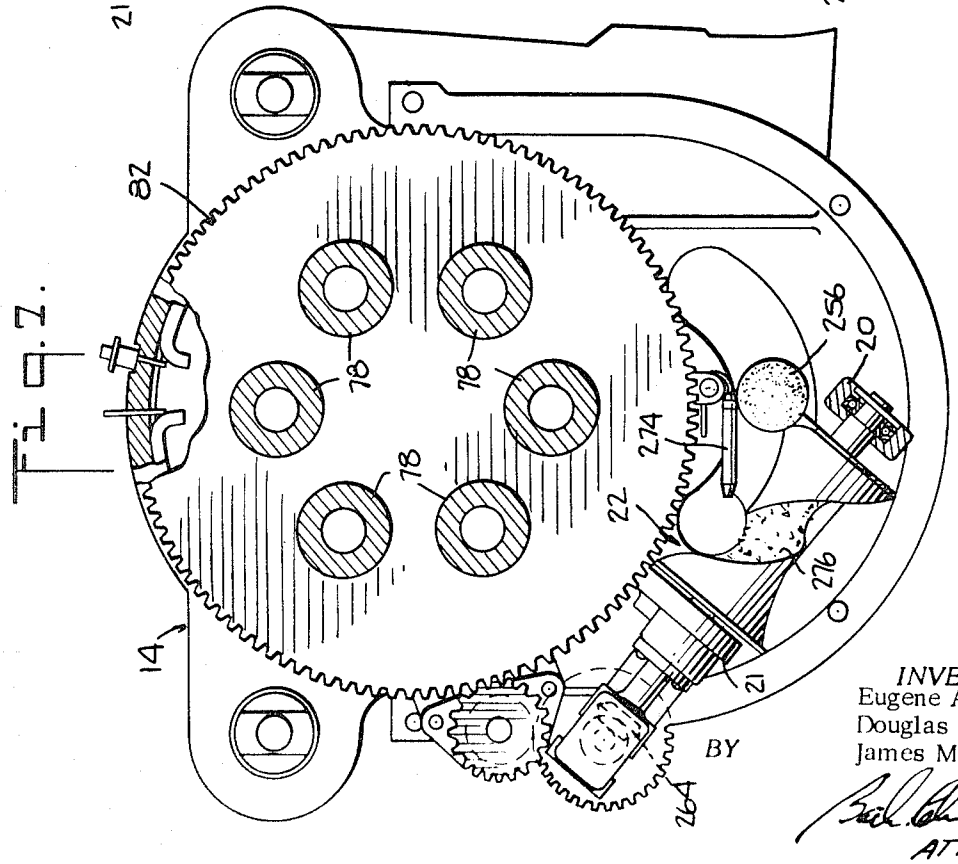

Fig. 7.

INVENTOR.
Eugene Ashley
Douglas P. Tassie
James M. Seemann

BY

ATTORNEY

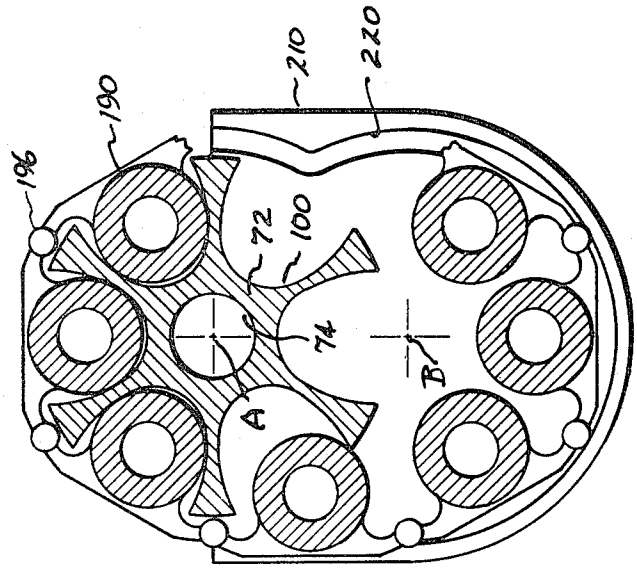

Fig 10

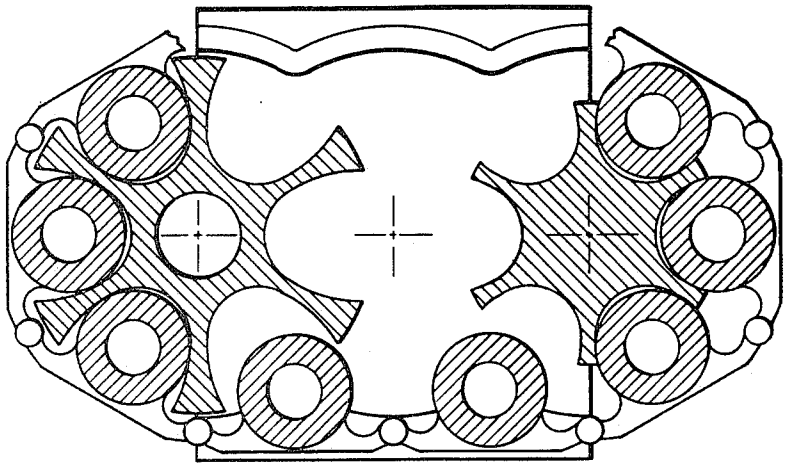

Fig 11

Eugene Ashley
Douglas P. Tassie
James M. Seemann

ATTORNEY

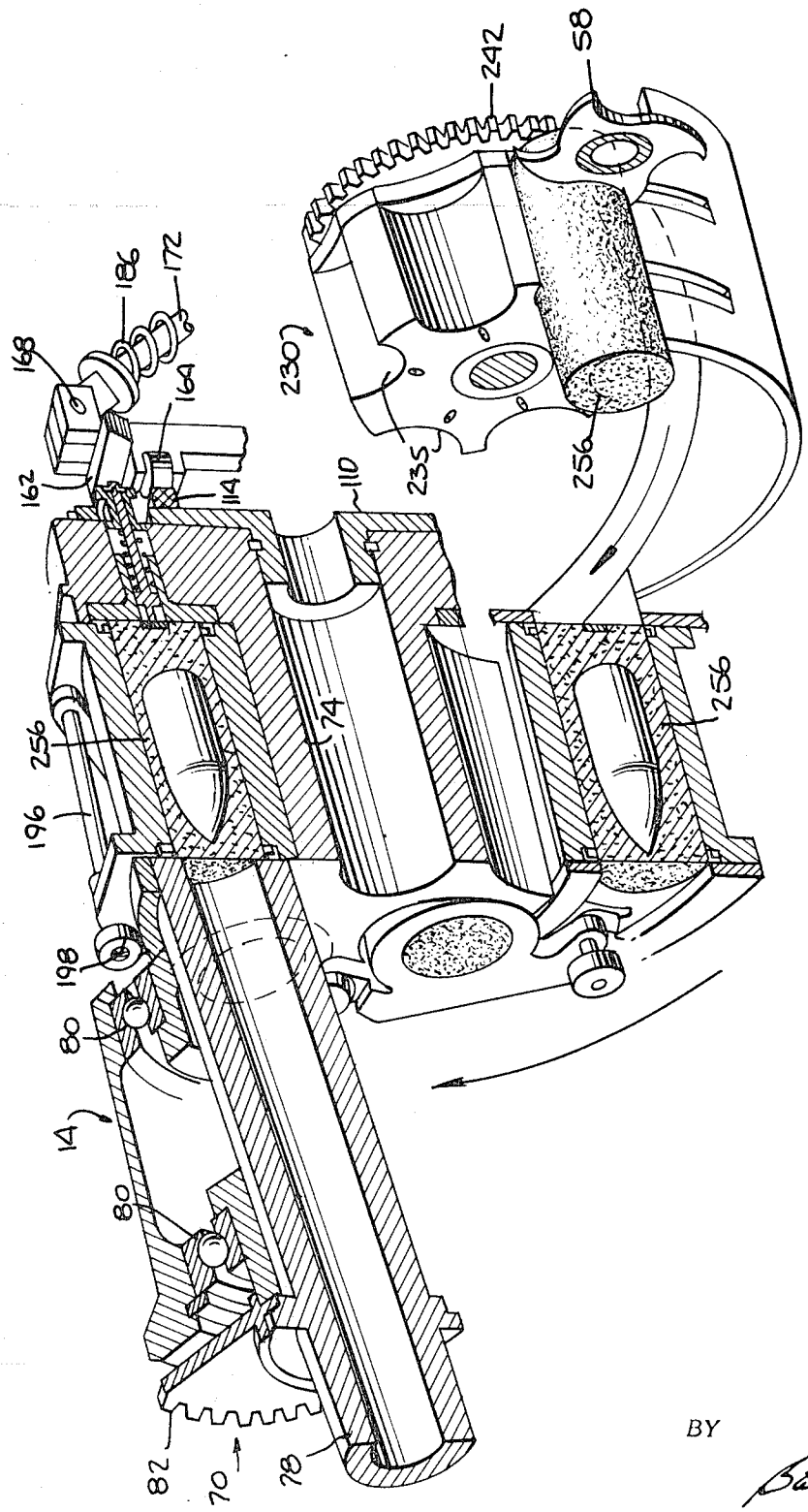

Fig. 12.

Eugene Ashley
Douglas P. Tassie
James M. Seemann
INVENTOR.

BY

ATTORNEY

MULTIBARREL AUTOMATIC WEAPON

BACKGROUND OF THE INVENTION

The Invention herein described was made in the course of or under a contract or subcontract thereunder, with the Department of Defense.

1. Field of the Invention

This invention relates to automatic weapons having a plurality of barrels mounted for rotation about a common axis and adapted to shoot caseless ammunition.

2. Prior Art

The classic revolving battery gun is shown in U.S. Pat. No. 125,563 issued to Richard J. Gatling on Apr. 9, 1872. This gun had a stationary housing; and a rotor assembly, journaled within the housing, having ten barrels and ten reciprocating bolts. The bolts were cammed by the housing and their function was responsive to the angular rotation of the rotor assembly. The gun fired cased ammunition, which was chambered, fired, and ejected by the bolt assembly. The first modern version of the Gatling gun is shown in U.S. Pat. No. 2,849,921 issued to Harold McC. Otto on Sept. 2, 1958, and a more recent version is shown in U.S. Pat. No. 3,380,343 issued to Robert E. Chiabrandy et al. on Apr. 30, 1968. Each of these modern guns is similar to the classic gun in having pluralities of barrels, chambers and bolts to shoot cased ammunition.

In cased ammunition the case serves, inter alia, two functions, viz: it provides a seal at the aft end of the chamber; and it provides a handle on the round of ammunition for ejection in the event of a misfire. However, the case amounts to some 40 percent of the weight of the round, which if saved, would provide a responsive decrease in system weight, or would provide that much more ammunition storage capacity.

SUMMARY OF THE INVENTION

Accordingly, it is an object of this invention to provide an automatic gun having a high rate of fire of caseless ammunition.

A particular object of this invention is to provide a gun which does not utilize a reciprocating bolt to chamber and lock a cartridge.

A feature of this invention is the provision of a gun having at least a barrel, at least a chamber and means for moving said chamber transversely to said barrel from a noncoaxial feed station to a coaxial lock and fire station, and means including a stationary cam surface for progressively chambering a cartridge in said chamber as it moves from said feed station to said lock and fire station.

BRIEF DESCRIPTION OF THE DRAWING

These and other objects, features and advantages will be apparent from the following specification thereof taken in conjunction with the accompanying drawing in which:

FIG. 1 is a perspective view from an aft viewpoint of a weapon embodying this invention;

FIG. 2 is a perspective view from a forward viewpoint of the weapon of FIG. 1;

FIG. 3 is a side elevated view, in cross-section, of the weapon of FIG. 1;

FIG. 4 is a top plan view of the weapon of FIG. 1;

FIG. 5 is an aft end view of the weapon of FIG. 1;

FIG. 6 is an aft end view in cross-section taken along the plane VI—VI of FIG. 3, particularly illustrating the chain of chambers;

FIG. 7 is a forward end view in cross-section taken along the plane VII—VII of FIG. 3, particularly illustrating the misfire conveyor; and

FIGS. 8 and 9 are detail perspective views of the misfire conveyor,

FIG. 10 is a diagram of FIG. 6 for an eight chamber gun,

FIG. 11 is a diagram of a second embodiment, similar to FIG. 6, for a ten chamber gun, and

FIG. 12 is a broken view of the weapon of FIG. 1.

THE PREFERRED EMBODIMENT

The weapon shown in FIG. 1 is a variant of the classic Gatling principle, and uses a rotating cluster of barrels which is secured in a rotor assembly and is driven by an external power source. Conventional, reciprocating bolts are not employed. Instead, a series of linked tubular firing chambers transport the cartridges into the rotor. In the firing position each chamber rests in a respective deep recess in the rotor and is longitudinally secured or locked between the barrel breech face and a surface of the rotor recess. The chambers are swung out of the rotor recess for loading fresh cartridges, and for ejecting such misfires as occur. This is accomplished by using more chambers than barrels, e.g., a loop of eight or more chambers for a cluster of six barrels. Since the length of the loop is thus longer than the circumference of the pitch circle of the barrel cluster, the loop extends free of the rotor for a portion of its travel and is open for loading and chambering by a stationary cam. The chamber then moves laterally into lock position and firing can thereupon take place. There is no need for a structural locking operation. The fore and aft components of the firing pressure pulse are reacted directly into the rotor structure, and the lateral components are contained by hoop tension in the wall of the chamber.

The housing assembly **10** includes an aft housing **12** and a forward housing **14**. The aft housing has a rabbet **16** which receives a lip **18** on the transverse wall **19** of the forward housing for longitudinal alignment. Radial alignment and clamping are provided by a plurality of mating bolt holes and bolts, not shown. A bearing block **20** extends forwardly from the wall **19**, and together with a rib **21**, supports the misfire ejection assembly **22**. A pair of recoil attenuator assemblies **23** are also housed in the forward housing **14**. Each recoil attenuator assembly, as best seen in FIG. **4**, includes a spindle **24** disposed in a bore **26** through an enlargement in the housing. The forward end of the spindle extends into a clevis **28** of the gun mount and is retained by a pivot bolt **30**. An aft external bushing **32** is adjustably threaded into the bore **26**, and has a shoulder **34** to retain the aft end of an aft internal bushing **36**. A multi-element, friction damped spring **38** is captured between the bushing **36** and a forward washer **39** which bears against a shoulder **40** on the spindle, and a shoulder **42** in the housing bore. Compression of the spring is adjusted by a nut **44** bearing against the bushing **36** and threaded on a stud **46** which is threaded into the aft end of the spindle **24**.

The feeder assembly **50** is also housed in the aft housing **12**. The feeder assembly includes a drive shaft **52** which is journaled through bearing blocks **54** and coupled to a knife blade clutch assembly **56**. A pair of four toothed sprockets **58** are fixed to the shaft to positively advance rounds, coming down along and between a pair of guides **60**, through an opening **62** in the housing. The clutch assembly **56** may be of the type shown in U.S. Patent application, Ser. No. 386,656 filed Oct. 1, 1969 by L. K. Wetzel and assigned to a common assignee.

A rotor assembly **70** is journaled for rotation in the housing. The rotor assembly includes a main rotor **72** which has a central, longitudinal bore **74** and six longitudinal bores **76** in an annular row. Six gun barrels **78** are respectively mounted in the bores **76** and secured to the rotor by suitable means, not shown, such as interrupted threads. The rotor is journaled to the forward housing by a pair of annular ball bearing assemblies **80** which is secured by a retaining ring **81**. A forward ring gear **82** is captured onto and between the gun barrels and the rotor. A mediate clamp **84** clamps the barrels together and is journaled by a ring bearing **86** to a forward gun mount ring **88**. A forward clamp **90** clamps the forward ends of the gun barrels.

The aft portion of the rotor **72** has six recesses **100**, each coaxial with a respective gun barrel and having a forward transverse face **102** and an aft transverse face **104**. The aft ends **106** of the barrels have respective inserts **108** fixed thereto which project slightly aft of the face **102**. A ring gear **110** is fixed to and is coaxial with the aft end of the rotor. The gear has a peripheral annulus of centrifugally directed teeth **112**, and an aft, longitudinally extending annulus of six cam ramp surfaces **114**.

A retaining fastener **116** which is used to longitudinally secure the gear to the rotor comprises a formed rectangular wire ring. The ring takes a G-shape with the distal ends of both legs turning centrifugally from the circumference. The ring has a diametral clearance fit around a circumferential groove in the hub of the gear. The legs of the ring protrude through a slot in the hub so that they can be reached through the center hole of the gear. The outside diameter of the ring, when the ring is unconstrained, is slightly larger than the outside diameter of the hub. When the legs of the ring are squeezed together, accessible through the center hole, the ring contracts to an outside diameter equal to or less than the diameter of the hub. The hub can then be inserted into the rotor bore **74** which contains a groove to accommodate the ring when it is unconstrained. When the hub is assembled and the legs are released, the ring is disposed in part in each groove, locking the hub longitudinally.

Six firing pin assemblies **120** are mounted in the aft end of the rotor **72**. Each assembly is disposed in a respective bore **120** which is coaxial with a respective gun barrel, and includes a body **124** having a stem portion **126** press fitted into the bore and a head portion **128**. The body has a central bore **130** with an internal neck **132**. A spindle **134** rides in the bore **130** and has a forward flange **136** and an aft spool **138**. A compression spring **140** is disposed on the spindle between the bore neck **132** and the spindle spool **138** to bias the spindle aft, that is, to retract the firing pin. A fixed retraction blade **142** is fixed to the aft housing to insure the retraction of the spool **138**, by camming rearwardly any unretracted spool.

Each of the six firing pins is struck in sequence by a single, spring loaded hammer assembly **144**. The assembly includes a rod **146** mounted through and between two bearing blocks **148** and **150** which extend outwardly from the aft housing. A support block **152** is fixed at its lower end to the forward end of the rod **146** and at its upper end to one end of a lateral rod **154** whose other end is adjustably fixed to the housing, by two nuts **155**, whereby to preclude rotation of the rod **146**. A hammer arm **156** pivotally mounted at its lower end to a clevis on the block **152** by a pin **158**. The upper end of the arm is formed as a clevis **160**, and below the clevis has an integral, forward facing hammer block **162**, and therebelow, a forward facing cam follower **164**. A plunger **166** has a forward end pivotally mounted to the clevis **160** by a pin **168**, an intermediate collar **170**, and an aft spindle **172**. The aft end of the spindle rides in a diametral bore through a dowel **174** which is mounted in a lateral bore through a toggle bracket **176**. The bracket has an aft clevis **178** pivotally mounted to the rod **146** by a pin **180**, and a forward clevis **182** mounted to the rod **146** by a pin **184**. A compression spring **186** is mounted on the spindle **172** between the collar **170** and the bracket **176**. The cam follower **164** rides on each of the cam ramps **114** to compress the spring **186** which is preloaded. The hammer assembly may be safed by extracting the pin **184** and swinging the toggle bracket **176** aft about the pin **180**, to preclude any effective compression of the spring **174**. The hammer assembly may be armed and the spring **174** preloaded by swinging the toggle bracket **176** forward and inserting the pin **184**.

Each of the eight chambers **190** is formed as a tube having a pair of longitudinally distal lugs **192** at one end and a pair of longitudinally set back lugs **194** at the other end. The tubes are alternated end for end so that a lug **192** can overlap the next adjacent lug **194**. Each lug has a longitudinal bore therethrough which receives a respective bushing, and adjacent lugs are linked by respective rods **196** each having a forward roller **198** and an aft roller **200**. A forward ring seal **202** is disposed in a recess **204** in the forward end of the chamber and an aft ring seal **206** is disposed in a recess **208** in the aft end of the chamber.

A forward cam plate **210** and an aft cam plate **212** are respectively disposed in a forward channel **214** and an aft channel **216** in the rear housing, and are pinned in place. When the rotor is in place, the plates must be unpinned from the rear housing before the housing can be removed. The rear cam plate may be removed once the rear housing has been detached. The front cam plate can be removed after the chambers **190** have been removed. Two holes **218** in the upper portion of the rear cam plate can be utilized for longitudinal withdrawal of any two adjacent rods **196** to permit the removal of the contained chamber, as for inspection of the chamber seals. The cam plates **210,212** have respective cam tracks **220, 222** for respectively supporting the rollers **198, 200** for guiding the chambers **190** through the transition between the upper and lower portion of the loop, and around the lower portion. In the upper portion of the loop each chamber is

disposed in and carried by a respective recess **100** in the rotor. Each chamber has two lines of contact **201** with the recess wall profile. This assists in the accurate alignment of the chamber and the respective barrel bore, and provides a clearance space at the bottom of the recess for the accumulation of foreign matter which might otherwise disturb the chamber position.

As shown in FIGS. **6** and **10**, the barrels and the rotor **72** revolve about a longitudinal axis A. The chain of chambers **190** is carried around by the rotor **72** serving as a six tooth sprocket, and is guided around a virtual six tooth sprocket having a longitudinal axis B. The transverse distance between the axes A and B is equal to the transverse distance between the axes of adjacent shafts **196**, i.e., the link length. The transverse distance between the axes A and B is also equal to the transverse distance between the axis A and the axis of the shaft **196** of any chamber engaged with the rotor **72**, and is also equal to the transverse distance between the axis B and axis of the shaft **196** of any chamber effectively carried around the virtual sprocket. The virtual sprocket, as shown, can not be realized since it would then overlap in volume the real sprocket **72**. However, the effect of the sprocket is provided by the cam tracks **220,222** which guide the rollers on the shafts, and, thereby, the chambers through the cusp transitions between the sprockets and around the virtual sprocket. No cam tracks are provided around the upper semicircle **72** as the rollers **198**, **200** ride on the sprocket. It may be noted that by locating the axes of the shafts **196** external to the rotor, relatively deep recesses **100**, with relatively thick distal rib sections therebetween, can be provided. Should it be desired to realize the virtual sprocket and/or to increase the number of chambers in the chain, as shown in FIG. **11**, it is merely necessary to make the transverse distance between the axes of the rotors a multiple of the link length, and to add one additional cam track cusp for each additional link length. For example, ten chambers can be accomodated around and between two rotors whose rotors axes are spaced apart by two link lengths, and provided with cam tracks having two cusps per side. The use of the cusps is necessary to maintain the rotor inter axis spacing constant during movement of the chain of chambers around the rotors.

The forward and aft cam plates also serve to retain the chamber seals in the respective chambers during the feed cycle when these chambers are in the lower portion of the loop. The forward cam plate also serves as a fixed stop and has an elastomeric shock absorbing surface adjacent the end of an ejection slot **224** in the lower portion of this plate to halt newly chambered rounds flush with the forward end of the respective chamber.

Rounds handed into the gun by the feeder assembly **50** are chambered by a rotary feed tray **230** and a stationary ram cam **232**. A back plate **234** is fixed to the aft end of the aft housing. A longitudinal support rod **236** is fixed to the back plate. The rotary feed tray **230** has six longitudinal recesses **235**, each for receiving a cartridge, and is journaled on the rod **136** by a forward bearing **238** and an aft bearing **240**. An annular spur gear **242** is coaxial with and fixed to the aft end of the tray **230**. A shaft **244** is journaled to the aft housing, has a forward spur gear **246** fixed thereto and meshed with and driven by the rotor spur gear **112**, and has an aft spur gear **248** fixed thereto and meshed with and driving the tray gear **242** through an aperture in the housing. A spur gear **250** of the feeder assembly clutch **50** is also meshed with and is driven by the tray gear **242**. The stationary ram cam **232** is a lateral section of a tube and has a cycloidal cam slot **252** having a forwardly sloping shoulder **254** which extends around the complete ram arc at the bottom of the housing and slopes forward one full round length.

Gun action may be considered to start with a cartridge in the feeder sprocket **58**. The feed tray **230** rotates in synchronization with the loop of chambers **190** and the rotor **72**. Depending upon the type of feed system used, the cartridge will have been picked up by the sprocket from a conveyor, or handed in directly from the exit unit of a storage drum. As the feeder sprocket rotates, the cartridge is cammed centrifugally by the side guides until its pitch velocity matches that of the rotary feed tray. Hand off into a recess of the rotary feed tray is thus accomplished without any abrupt change in velocity. After hand off, the cartridge is controlled by the feed tray. Lateral movement of the cartridge is precluded by the contour of the respective recess and the adjacent interior wall of the stationary ram cam **252**. The cartridge is carried in coaxial alignment with an empty chamber and is free to move forward longitudinally. Forward ramming begins after the cartridge has been fully captured in the rotary feed tray. As the cartridge is carried around by the rotary feed tray it is also slid along in the stationary ram cam slot **252**, whose shoulder **254** abuts the aft end of the cartridge and cams the cartridge longitudinally forward into the chamber. In FIG. **3**, cartridge **256** is shown partially chambered. Once chambered, the cartridge remains chambered as the respective chamber moves into its respective rotor recess **100** and is sealed between its respective barrel **78** and firing pin head portion **128**. The cycloidal shape of the ram cam accelerates the cartridge uniformly, and allows it to decelerate as much as possible under the effect of friction before striking the stop. As the chamber passes the firing position the cam follower **164** rides off a respective cam ramp surface **114** and the released compression spring **186** drives the hammer arm **156** forward to impact the firing pin spindle **134** to fire the cartridge. Since the cartridge is caseless and consumable, the chamber is empty after firing and is ready to receive a fresh cartridge. To clear the gun at the end of a burst, the clutch **56** is disengaged to halt the feeder assembly drive shaft while the rotor assembly continues to rotate and fire all chambered cartridges. The gun comes to a full stop with all of its chambers empty.

The gun is designed to utilize a telescoped cartridge having a cylindrical shape without any step or taper. Thus a fresh cartridge incoming aft will displace a misfired cartridge presently in a chamber and force it out forward. No provision need be made for separable extraction of misfired cartridges, and this combining of the feeding and extracting processes greatly simplifies the gun. Room is left ahead of the loading area for a misfired cartridge to clear the housing. As a misfire begins to be ejected from its chamber, it is captured and controlled by a gear driven ejector assembly forward of the chamber, as shown in FIGS. **3**,**7**,**8** and **9**.

The misfire ejector assembly comprises a worm **260** fixed on a shaft **262** which is journaled to and between the bearing block **26** and the rib **21**, and has a mitre gear **264** fixed thereto. A power shaft **266** is journaled to the housing and at its aft end is coupled to a power source, not shown, such as a hydraulic motor. A mitre gear **268** is fixed to the forward end of the shaft and meshed with the worm mitre gear **264**. A spur gear **270** is also fixed to the shaft **266** and is meshed with a spur gear **272** fixed on the shaft **244**. A pressure roller **274** is mounted to the housing by a spring **276** at an angle to the worm. The worm is provided with a friction surface composed of wire studs embedded in the worm surface and fixed with epoxy.

As the eight chambers rotate around the lower portion of the loop on a six chamber circle past the ejection slot **224** they maintain a spacing of 60° between adjacent chambers. The worm lead is also 60° of profile rotation for one revolution of the worm. Thus the concavity **276** in the worm provides a shape which laterally mates with the cylindrical shape of the cartridge, so that the cartridge remains longitudinally aligned with the bore of the chamber as the chamber progresses along the ejection slot. For each revolution of the rotor the worm is geared to rotate six times, allowing the concavity shape to follow all six chambers.

As a chamber containing a misfired cartridge progresses along the ejection slot, the fresh cartridge then being chambered by the ram cam pushes the misfired cartridge longitudinally forward, from the chamber bore, through the ejection slot, as shown in FIG. **8**, into the concavity **276** of the worm, under the spring loaded roller **274**. The worm acts as an endless conveyor which supports, cradles and longitudinally stabilizes the cartridge as it is ejected. In addition, the relatively high peripheral speed of the worm accelerates the cartridge out of the chamber and creates a gap between the aft end of the misfired cartridge and the fresh cartridge being chambered. The ejection slot terminates, and the wall of the forward cam plate **210** is accomodated in this gap. The aft surface of the forward cam plate serves to stop the fresh cartridge when it is fully chambered. The spring loaded roller ensures engagement between the misfired cartridge and the worm during gun low speed or hand cycling. Centrifugal force serves this function at relatively higher gun speeds.

To insure clearing of all chambers at the end of a burst of firing, after the declutching operation has occurred,an air blast is provided. If a misfire should occur in the last eight rounds chambered prior to declutching, the air blast must serve in lieu of an incoming round to displace the misfire. An air fitting **280** is fitted into a longitudinal blind bore **282** in the support rod **236** which communicates with a radial bore **284** directed downwardly. Six air tubes **286** are disposed in the feed tray **230**, each respectively aligned with a recess **235**. The air tube for the lowermost recess, which is the chamber-eject position, is in communication with the bore **282**. When the burst of firing is to be ended, the supply of cartridges to the feeder assembly **50** is discontinued and a supply of air is delivered to the fitting **280**. As the feed tray rotates, a blast of air is delivered successively through each air tube to the respective chambers to blast out any misfired cartridge contained therein.

In a revolving battery gun it is desirable that the ammunition propellant ignite at the twelve o'clock position to preclude or at least minimize, lateral torque on the gun mounts. In ammunition having a stab primer there is a significant delay between the time of firing pin impact and propellant ignition. Thus it is necessary to finely adjust the searing of the hammer to preceed the chamber arriving at the twelve o'clock position by the delay interval. This adjustment is accomplished by adjusting the effective length of the rod **154**, by means of the two nuts **155**, to swing the hammer assembly on its pivot rod **146**.

While there has been shown and described a preferred embodiment of this invention, it will be appreciated that the invention may be embodied otherwise than as herein specifically illustrated or described, and that certain changes in the form and arrangement of parts and in the specific manner of practicing the invention may be made without departing from the underlying idea or principles of this invention within the scope of the appended claims.

What is claimed is:

1. A machine gun comprising:
at least a barrel;
at least a chamber having a forward end and an aft end and means for moving said chamber transversely to said barrel from a feed station to a lock and fire station which is coaxial with said barrel, and return;
means for chambering a cartridge from said aft end forwardly into said chamber as it moves between said feed and fire stations including
a housing having a forward plate defining a transverse surface immediately adjacent said forward end of said chamber for directly receiving and halting the newly chambered cartridge flush with said forward end of said chamber;
a stationary cam surface for initially accelerating a cartridge longitudinally and for subsequently permitting significant frictional deceleration of said cartridge before it strikes said transverse surface of said plate; and
a transversely movable feed tray for disposing a cartridge against and along said cam surface for inserting the cartridge into said chamber at said feed station.

2. A machine gun according to claim **1** wherein
said transverse surface of said plate includes a portion having an elastomeric shock absorbing surface to directly receive and to halt the newly chambered round flush with said forward end of said chamber.

3. A machine gun comprising:
a plurality of barrels;
a plurality of chambers larger in number than said plurality of barrels, and each chamber having a forward and an aft end,
means for chambering a cartridge;
said means including
a housing having a plate defining a transverse surface immediately adjacent said forward end of said respective chamber while a cartridge is being chambered therein, for directly receiving and halting the newly chambered cartridge flush with said forward end of said chamber;

a transversely movable feed tray for moving each cartridge in sequence transversely, and

a stationary cam surface for abutting the cartridges as they are moved transversely by said tray to move them longitudinally into respective chambers by initially accelerating each cartridge and by subsequently permitting significant frictional deceleration of said cartridge before it strikes said transverse surface.

4. A machine gun according to claim 3 wherein

said transverse surface of said plate includes a portion having an elastomeric shock absorbing surface to directly receive and to halt the newly chambered round flush with said forward end of said chamber.

* * * * *